Train America Studios Cruise Control Motherboard Pinouts

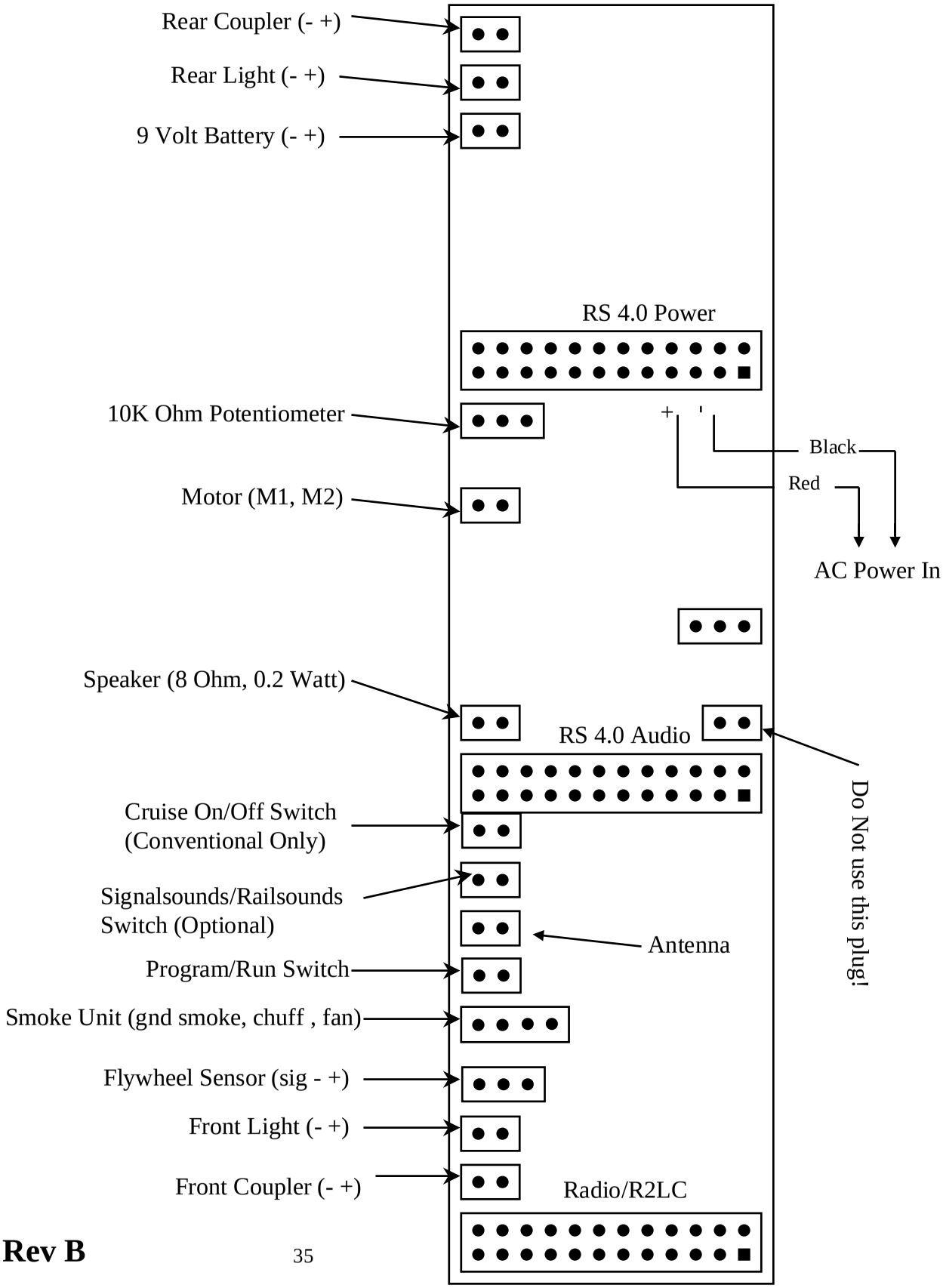

Rev B